Plastic Molding MANUFACTURING

America's Technology Molder

CERTIFIED ISO 9001:2008 COMPANY

Engineered Plastic Bearings For All Your Products & Assembly Needs!

Unlimited Dimensions

Plastic Bearings, Washers, Seals and Bushings

Hudson, MA • Berlin, CT • Lancaster, PA • South Bend, IN

574-234-9036 • www.plasticmoldingmfg.com

Plastic Molding MANUFACTURING
America's Technology Molder

Solid Flanged Bearings

Solid flanged bearings are used for higher load capcity compared to cored bearings. Common uses of this part include material carts, casters and pneumatic tire applications.

PART NO.	A	B	C	D	E	Material
H-467*	0.960	0.093	0.719	0.636	0.870	Natural Acetal
G-467	1.250	0.093	0.500	0.650	0.870	Nylon 6/6
LS-183AL	1.250	0.062	0.562	0.695	1.125	Natural Acetal
LS-111SP	1.500	0.093	0.790	0.768	1.192	Natural Acetal
LS-113-2629	1.500	0.093	0.790	0.448	1.197	Natural Acetal
LS-113	1.500	0.093	0.790	0.515	1.197	Natural Acetal
LS-112	1.500	0.093	0.790	0.640	1.197	Natural Acetal
LS-112SP	1.500	0.200	0.880	0.640	1.197	Natural Acetal
LS-111-2151	1.500	0.093	0.790	0.760	1.197	Black Acetal
LS-111	1.500	0.093	0.790	0.770	1.197	Natural Acetal
LS-111-2232	1.500	0.093	0.790	0.770	1.197	Nylon 4/6 (High Temp.)
2429	1.500	0.093	0.790	0.770	1.197	Natural Acetal
LS-167*	1.545	0.100	0.785	1.005	1.385	Natural Acetal
LS-167BLK*	1.545	0.100	0.785	1.005	1.385	Black Acetal
LS-166*	1.545	0.100	0.780	0.885	1.385	Natural Acetal
LS-167A*	1.550	0.110	0.720	1.040	1.389	Natural Acetal
LS-167BLK*	1.550	0.110	0.720	1.040	1.389	Black Acetal

* Parts have a groove on the side.

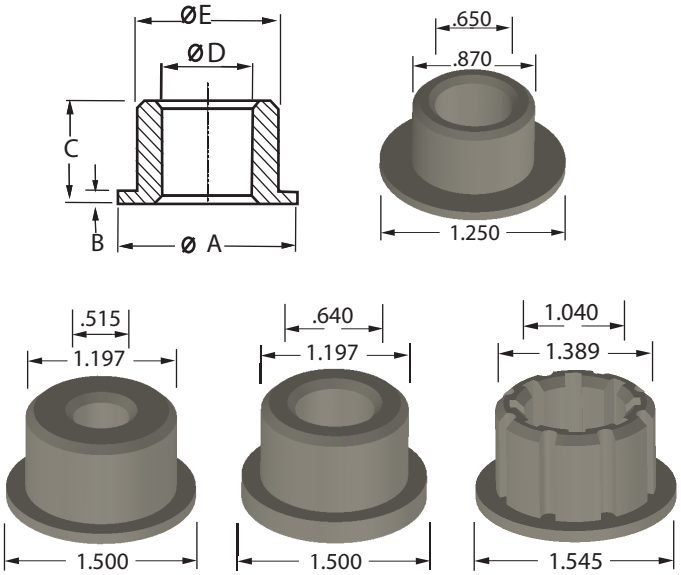

Cored Flanged Bearings

Cored flanged bearings are cost effective, light weight bearings that can be used on the end of a wheel or caster with or without a spanner bushing. Common uses are for light duty carts or pneumatic tire applications.

PART NO.	A	B	C	D	E	Material
LS-190	1.250	0.062	0.500	0.320	1.070	Natural Acetal
LS-191	1.250	0.062	0.500	0.385	1.070	Natural Acetal
LS-192	1.250	0.062	0.500	0.510	1.070	Natural Acetal
LS-193	1.250	0.062	0.500	0.632	1.070	Natural Acetal
LS-180	1.310	0.062	0.562	0.322	1.130	Natural Acetal
LS-180A	1.300	0.093	0.593	0.322	1.130	Natural Acetal
LS-181B	1.317	0.250	0.750	0.385	1.130	Black Acetal
LS-181	1.310	0.062	0.562	0.385	1.130	Natural Acetal
LS-181A	1.310	0.093	0.593	0.380	1.130	Natural Acetal
LS-182	1.310	0.062	0.562	0.510	1.130	Natural Acetal
LS-182A	1.310	0.093	0.593	0.510	1.130	Natural Acetal
LS-183-2470	1.312	0.062	0.562	0.635	1.133	Natural Acetal
LS-182A-2406	1.300	0.093	0.593	0.520	1.130	Natural Acetal
LS-183TR	1.430	0.065	0.555	0.630	1.130	Natural Acetal
LS-626A	1.312	0.062	0.562	0.625	1.133	Natural Acetal
LS-183	1.300	0.062	0.562	0.630	1.130	Natural Acetal
LS-183B	1.312	0.062	0.562	0.635	1.133	Natural Acetal
LS-183-DOYLE	1.312	0.062	0.562	0.700	1.133	Natural Acetal
LS-113B	1.375	0.093	0.655	0.510	1.195	Natural Acetal
LS-163*	1.550	0.093	0.708	0.510	1.390	Natural Acetal
LS-163BLK*	1.550	0.093	0.708	0.510	1.385	Black Acetal
LS-163A*	1.550	0.093	0.708	0.535	1.385	Natural Acetal
LS-164*	1.550	0.093	0.708	0.635	1.385	Natural Acetal
LS-164BLK*	1.550	0.093	0.708	0.635	1.385	Black Acetal
LS-164A*	1.550	0.093	0.708	0.655	1.385	Natural Acetal
LS-165*	1.550	0.093	0.708	0.760	1.385	Natural Acetal
LS-165BLK*	1.550	0.093	0.708	0.760	1.385	Black Acetal
LS-165A*	1.550	0.093	0.708	0.775	1.385	Natural Acetal
LS-165N*	1.550	0.130	0.740	0.770	1.385	Natural Acetal

* These parts have a groove on the side.

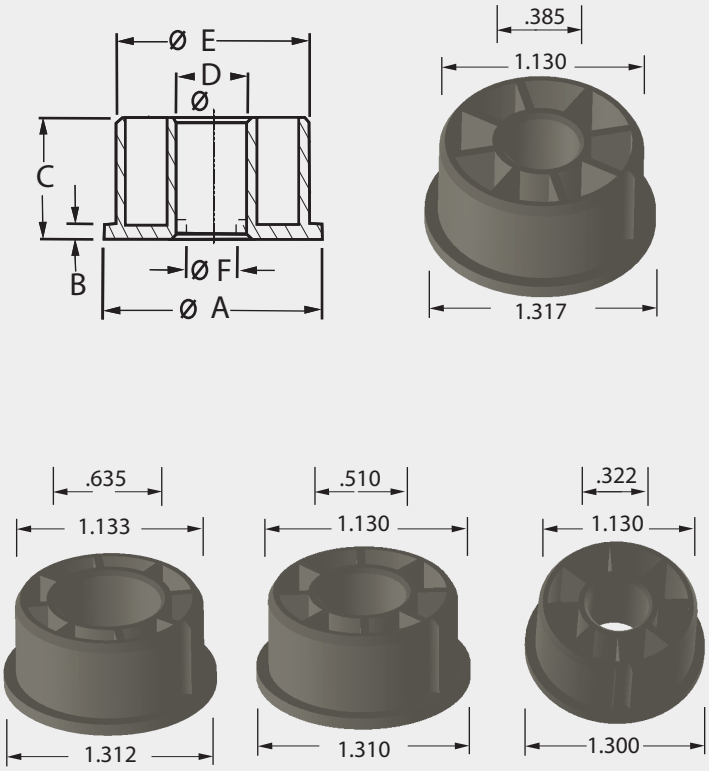

Plastic Molding MANUFACTURING
America's Technology Molder

Stepped Flanged Bearings

Bearings with flange and step are used to eliminate the use of external washers typically required to take up space in wheel hub width.

PART NO.	A	B	C	D	E	F	G	Material
LS-113C	1.375	0.093	0.655	0.510	1.194	0.750	0.062	Natural Acetal
LS-165C	1.500	0.093	0.968	0.755	1.375	0.925	0.035	Natural Acetal
LS-163C	1.490	0.093	0.968	0.513	1.375	0.925	0.035	Natural Acetal
LS-1645	1.490	0.093	0.968	0.658	1.375	0.925	0.035	Natural Acetal
LS-164C	1.490	0.093	0.968	0.635	1.375	0.925	0.035	Natural Acetal

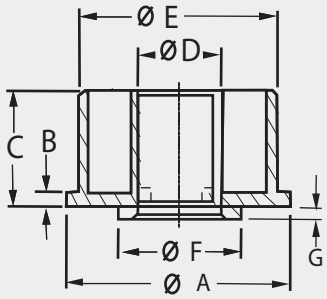

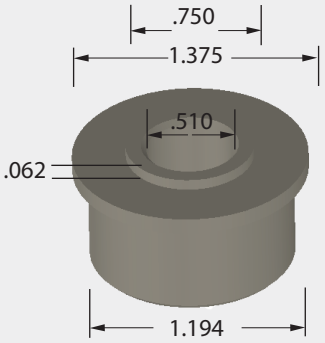

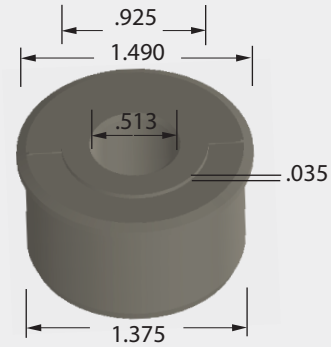

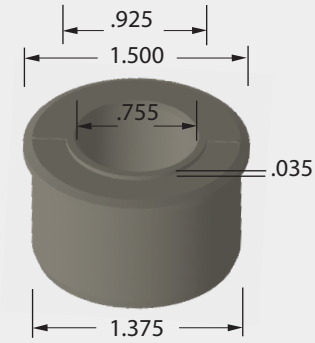

Cored Straight Bearings (Requires Two Per Wheel)

Bearings that are made without flange work internally to the wheel with washers or additional bearing on the outside of the wheel. Commonly used where the width of wheel or caster will not permit a flange.

PART NO.	A	B	C	D	E	Material
LS-113A	1.194	0.655	0.510	n/a	n/a	Natural Acetal
LS-113D	1.194	0.717	0.510	0.062	0.750	Natural Acetal
2432	1.376	1.125	0.640	n/a	n/a	Black Acetal
LS-149	1.950	1.250	1.030	n/a	n/a	Black Acetal
LS-150	1.950	1.500	1.020	n/a	n/a	Black Acetal
LS-151	1.950	1.250	1.250	n/a	n/a	Black Acetal
LS-152	1.950	1.500	1.250	n/a	n/a	Black Acetal

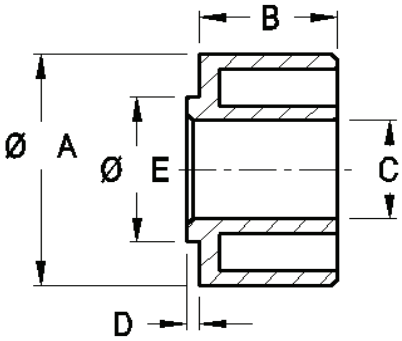

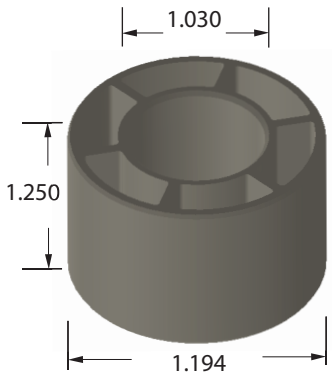

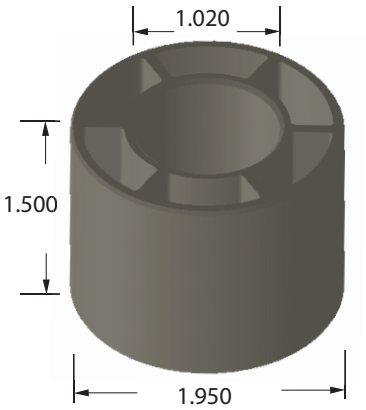

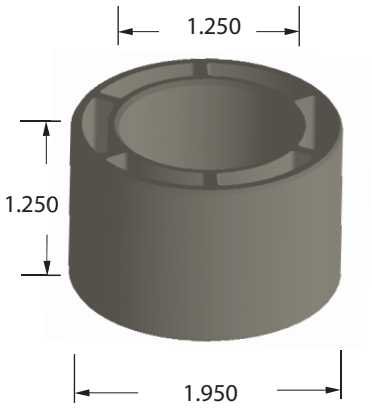

Plastic Molding MANUFACTURING
America's Technology Molder

Solid Straight Bearings

At PMM we have solid bearings up to 2.5 inches long. Common uses of this part are applications where a one piece bearing is desired.

PART NO.	A	B	C	Material
LS-1407	0.315	1.115	0.440	Natural Acetal
4470-00	0.315	1.800	0.562	Natural Acetal
LS-168	0.510	1.730	0.943	Natural Acetal
LS-169A	0.505	1.213	1.068	Natural Acetal
LS-169A-2245	0.505	1.213	1.068	Black Acetal
LS-169	0.635	1.937	1.068	Natural Acetal
LS-169BLK	0.635	1.937	1.068	Black Acetal
AUC-314	0.485	2.120	1.187	Black Acetal
LS-111A	0.755	0.687	1.187	Natural Acetal
LS-121E	0.515	1.625	1.191	Black Acetal
LS-121A	0.515	2.125	1.191	Black Acetal
LS-121AW	0.515	2.125	1.191	Natural Acetal
LS-121F	0.520	1.630	1.191	Black Acetal
LS-121C	0.567	1.630	1.191	Black Acetal
LS-122B	0.635	1.630	1.191	Black Acetal
LS-122B-2632	0.635	1.630	1.191	Natural Acetal
LS-122BR	0.635	1.630	1.191	Polypropylene
LS-122G	0.635	1.895	1.191	Black Acetal
LS-122	0.635	2.125	1.191	Black Acetal
LS-122-2631	0.635	2.125	1.191	Natural Acetal
LS-122-1959	0.641	1.432	1.191	Black Acetal
LS-148	0.755	0.438	1.191	Natural Acetal
LS-121B	0.755	1.625	1.191	Black Acetal
LS-121G	0.755	1.895	1.191	Black Acetal
LS-121	0.755	2.125	1.191	Black Acetal
LS-121D	0.755	2.260	1.191	Black Acetal
LS-147B	1.000	1.625	1.442	Black Acetal
LS-147	1.000	2.000	1.442	Black Acetal
LS-146	1.000	2.500	1.562	Black Acetal

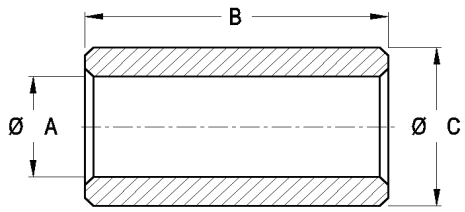

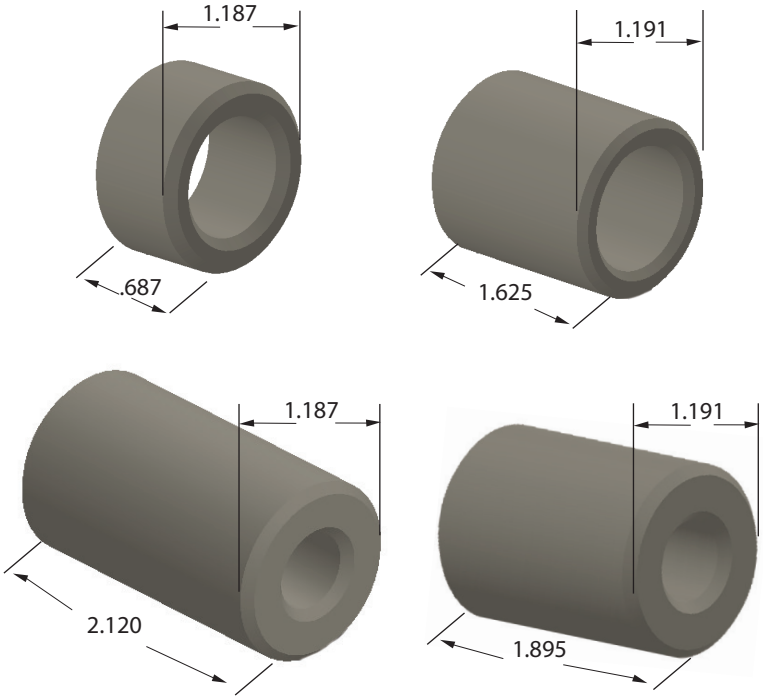

Bearing Units

Bearing units optimize assembly. They are commonly used where fork width is 1.312 – 1.375. With shaft diameter of .312 or .375.

PART NO.	A	B	C
LS-526	1 5/8"	1 5/16" to 1 3/8"	5/16"
LS-626	1 5/8"	1 5/16" to 1 3/8"	3/8"

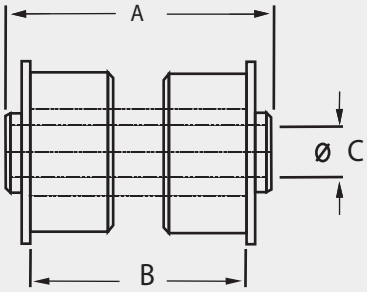

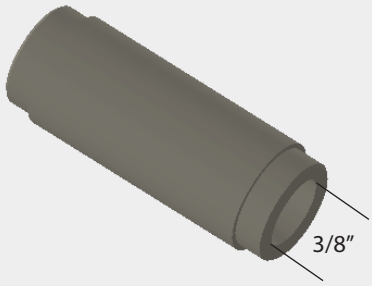

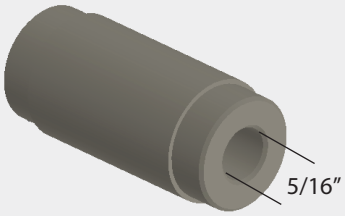

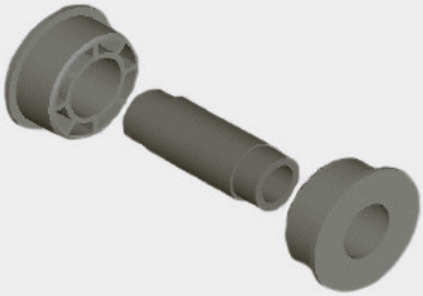

Plastic Molding MANUFACTURING
America's Technology Molder

Spanner Bushings

Solid polymer bushings are used in conjunction with bearings to provide two smooth rolling surfaces. Commonly used where steel bearings fail due to exposure to wash down processes.

PART NO.	A	B	C	Material
LS-58035	0.312	1.035	0.500	Mineral filled Nylon 6/6
LS-5826-1493	0.318	1.620	0.500	Mineral filled Nylon 6/6
LS-5827-1866	0.318	1.687	0.500	Mineral filled Nylon 6/6
LS-5820	0.315	1.250	0.500	Mineral filled Nylon 6/6
LS-5820H*	0.315	1.250	0.500	Mineral filled Nylon 6/6
LS-5825	0.315	1.562	0.500	Natural Nylon 6/6
LS-5825H*	0.315	1.562	0.500	Natural Nylon 6/6
59044X44	0.315	2.750	0.500	Natural Acetal
2613	0.320	2.780	0.500	Mineral filled Nylon 6/6
2674	0.380	1.417	0.500	Mineral filled Nylon 6/6
LS-6824H-2071*	0.380	1.495	0.495	Mineral filled Nylon 6/6
LS-6824	0.380	1.495	0.500	Mineral filled Nylon 6/6
LS-6826	0.380	1.625	0.500	Mineral filled Nylon 6/6
LS-6826H*	0.380	1.625	0.500	Mineral filled Nylon 6/6
ZF06082701	0.380	1.700	0.495	Talc Filled Polypropylene
API-2407	0.380	1.708	0.500	Mineral filled Nylon 6/6
LS-6829	0.380	1.820	0.500	Mineral filled Nylon 6/6
LS-6829H*	0.380	1.820	0.500	Mineral filled Nylon 6/6
LS-61025	0.380	1.563	0.625	Mineral filled Nylon 6/6
LS-61025H*	0.380	1.563	0.625	Mineral filled Nylon 6/6
LS-61027	0.380	1.688	0.625	Mineral filled Nylon 6/6
LS-61027H*	0.380	1.688	0.625	Mineral filled Nylon 6/6
LS-61029	0.380	1.813	0.625	Mineral filled Nylon 6/6
LS-61029H*	0.380	1.813	0.625	Mineral filled Nylon 6/6
LS-61227-2153	0.380	1.687	0.750	Mineral filled Nylon 6/6
LS-61227H-2154*	0.380	1.687	0.750	Mineral filled Nylon 6/6
LS-81224	0.505	1.500	0.750	Mineral filled Nylon 6/6
LS-81224H*	0.505	1.500	0.750	Mineral filled Nylon 6/6
LS-81230	0.505	1.875	0.750	Mineral filled Nylon 6/6
LS-81230H*	0.505	1.875	0.750	Mineral filled Nylon 6/6
LS-81237	0.505	2.312	0.750	Mineral filled Nylon 6/6
LS-81237H*	0.505	2.312	0.750	Mineral filled Nylon 6/6
2599	0.505	2.312	0.750	Nylon 4/6 Black (High Temp.)
LS-81239	0.505	2.440	0.750	Mineral filled Nylon 6/6
LS-81239H*	0.505	2.440	0.750	Mineral filled Nylon 6/6
39286	0.628	1.240	0.750	Natural Nylon 6/6

* These parts have an oil hole.

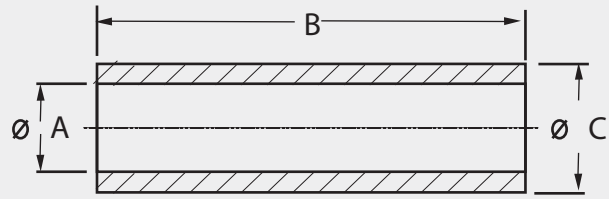

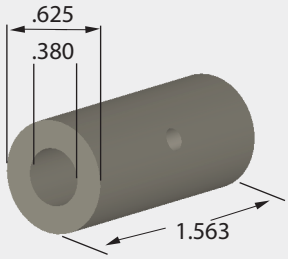

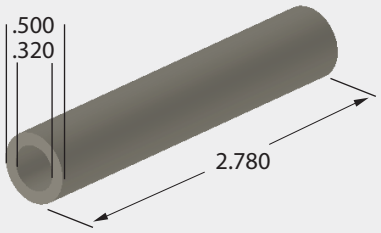

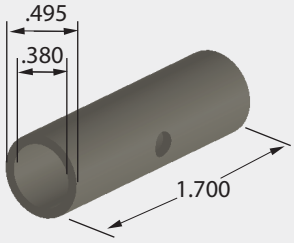

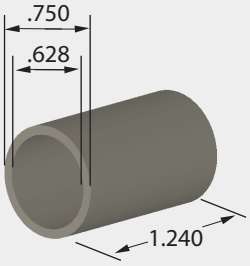

Stepped Spanner Bushings

Stepped Spanner Bushings are used in conjunction with other PMM bearings to provide definitive fork width. Commonly used in bearing units.

PART NO.	A	B	C	D	E	F	Material
LS-61026B	0.565	1.630	0.173	1.285	0.382	0.620	Mineral filled Nylon 6/6
LS-51026B	0.565	1.630	0.173	1.285	0.318	0.620	Mineral filled Nylon 6/6
LS-51026AL	0.685	1.625	0.240	1.145	0.375	0.740	Mineral filled Nylon 6/6
LS-51026	0.685	1.625	0.707	0.210	0.323	0.735	Mineral filled Nylon 6/6
LS-183B-5	0.625	1.625	0.643	0.339	0.312	0.687	Mineral filled Nylon 6/6
LS-183B-6	0.625	1.625	0.643	0.339	0.375	0.687	Mineral filled Nylon 6/6
LS-61026	0.685	1.625	0.708	0.210	0.375	0.210	Mineral filled Nylon 6/6
LS-81239HA	0.750	2.460	0.975	0.510	0.510	0.800	Mineral filled Nylon 6/6

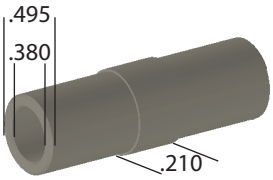

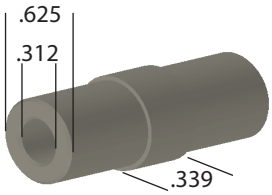

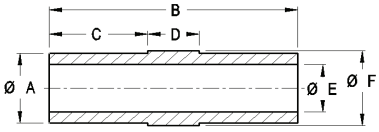

Grease Seals

Dirt or grease seals are commonly used in exposed environments where a seal is necessary to protect the application from unwanted particles from entering.

PART NO.	A	B	C	Material
LS-155	1.074	0.622	0.129	Santoprene Nat.
LS-154	1.196	0.622	0.125	Santoprene Nat.
LS-153	1.196	0.739	0.125	Santoprene Nat.
LS-154A	1.204	0.625	0.093	Santoprene Nat.
LS-153A	1.204	0.750	0.093	Santoprene Nat.
LS-156	1.446	0.742	0.129	Santoprene Nat.

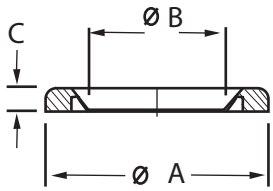

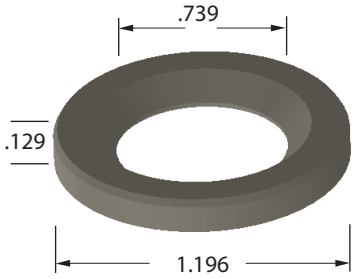

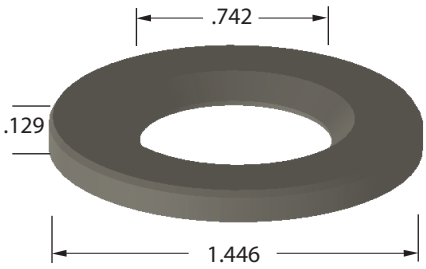

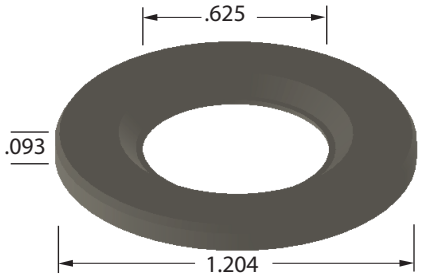

Flanged Seals

Flanged Seals are also commonly used in exposed environments of dirt and grease, where additional space is required to be sealed to protect the application from unwanted particles from entering.

PART NO.	A	B	C	D	E	Material
LS-128	1.196	0.625	0.100	0.187	1.500	Santoprene Nat.
LS-128A	1.197	0.615	0.120	0.213	1.500	Santoprene Nat.
LS-1271C	1.197	0.742	0.100	0.187	1.500	Nylon 6/6 Nat.
LS-127	1.197	0.745	0.094	0.187	1.500	Santoprene Nat.
2591	1.197	0.745	0.094	0.187	1.500	TPE 100 Black
2573	1.197	0.745	0.094	0.187	1.500	TPE 100 Nat.
LS-127 BLK	1.197	0.745	0.094	0.187	1.500	Santoprene Black
LS-127AL-BS	1.200	0.742	0.122	0.221	1.500	Santoprene Black
LS-127A	1.200	0.742	0.122	0.221	1.500	Santoprene Nat.
2595	1.200	0.742	0.122	0.221	1.500	TPE 100 Nat.
2596	1.200	0.742	0.122	0.221	1.500	TPE 100 Black

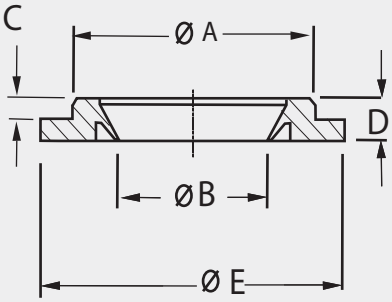

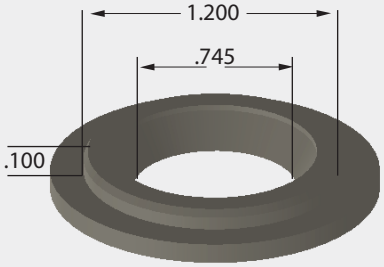

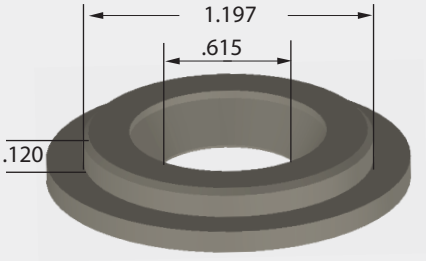

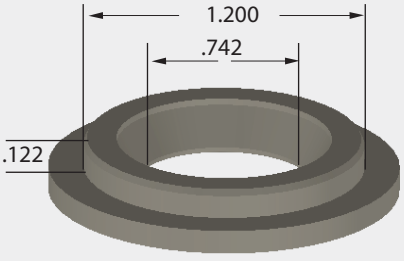

Washers Of All Sizes

Polymer washers can be used in any situation were a washer is required.

PART NO.	A	B	C	Material
1572	0.600	0.290	0.064	Black Acetal
2543	0.875	0.315	0.125	Black Acetal
LS-157	0.946	0.505	0.089	Nylon 6/6 Nat.
1573	1.005	0.490	0.064	Black Acetal
LS-158	1.069	0.645	0.089	Nylon 6/6 Nat.
1574	1.140	0.550	0.064	Black Acetal
LS-108	1.196	0.650	0.090	Nylon 6/6 Nat.
LS-108B	1.196	0.650	0.090	Black Acetal
LS-107	1.196	0.780	0.090	Nylon 6/6 Nat.
LS-107B	1.196	0.780	0.090	Black Acetal
LS-107A	1.204	0.800	0.093	Nylon 6/6 Nat.
LS-104	1.250	0.515	0.060	Nylon 6/6 Nat.
2413	1.290	0.310	0.130	Black Acetal
LS-160A	1.570	0.760	0.093	Nylon 6/6 Nat.
LS-160	1.570	1.010	0.093	Natural Acetal

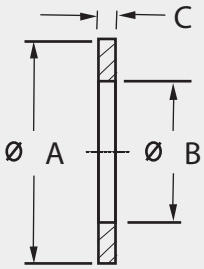

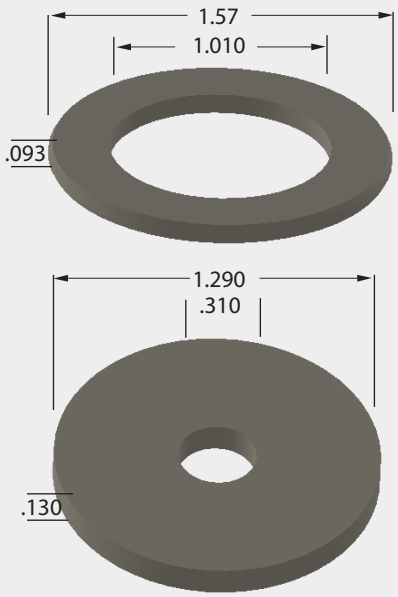

Retainer Washers

Retainer washers are thick and used to take up space where two washers may need to be used.

PART NO.	A	B	C	Material
B-6	0.952	0.554	0.193	Nylon 6/6 Nat.
B-33	1.203	0.665	0.218	Nylon 6/6 Nat.
B-44	1.203	0.795	0.218	Nylon 6/6 Nat.

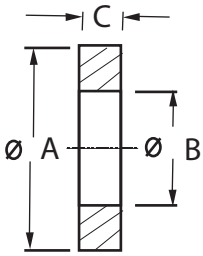

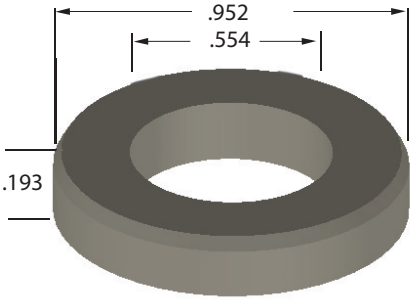

Stepped Washers

Stepped washers hold a recess. They are commonly used where increased diameter may be needed without increases in thickness.

PART NO.	A	B	C	D	E	Material
LS-130A	1.944	1.030	0.125	0.060	1.490	Nylon 6/6 Nat.
LS-130B	1.944	1.155	0.125	0.060	1.490	Nylon 6/6 Nat.
LS-130C	1.944	1.280	0.125	0.060	1.490	Nylon 6/6 Nat.

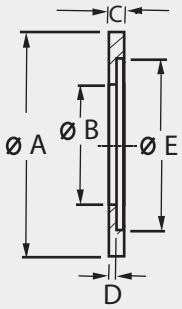

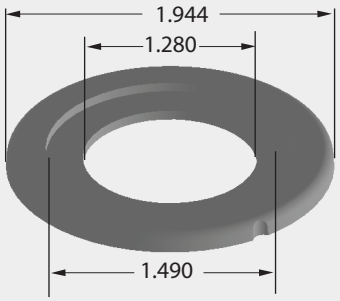

Flanged Washers

Flanged washers are commonly used where an increased diameter may be needed without increases in thickness.

PART NO.	A	B	C	D	E	Material
SH-1	1.000	0.625	0.125	1.040	0.016	Natural Acetal
SH-2	1.000	0.750	0.125	1.040	0.016	Natural Acetal
SH-4	1.000	0.787	0.125	1.040	0.016	Natural Acetal
SH-3	1.000	0.875	0.125	1.040	0.016	Natural Acetal
2571	1.938	1.050	0.172	2.350	0.078	Mineral filled Nylon Black

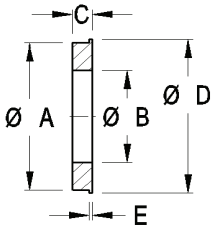

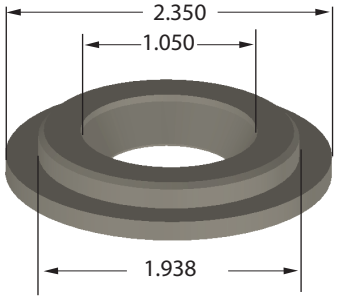

Plastic Molding MANUFACTURING
America's Technology Molder

Advantages of plastic Bearings:

- Corrosion Resistance
- Self Lubrication
- Low Cost
- Low Operating Noise Levels
- Light Weight

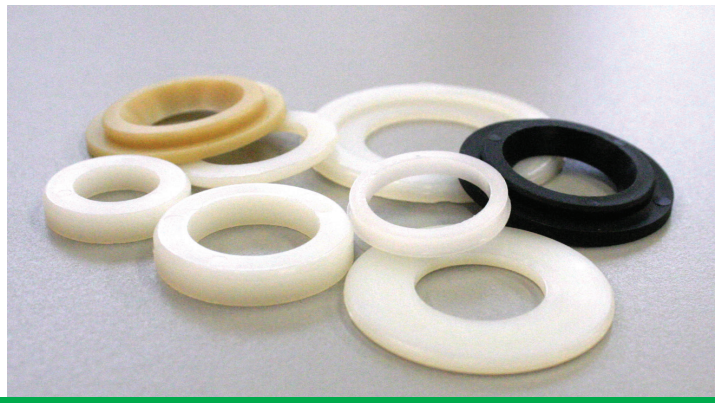

Custom Bearings For All Your Products and Assemblies

Call 574-234-9036 to discuss your specific requirements. Our in-house custom design, tool manufacturing, molding facility, and team of experienced engineers will assist all of your custom assembly needs.

Email **sales@plasticmoldingmfg.com** for engineering support. Our staff has experience molding hundreds of grade resins.

Resin Information

Acetal: Operating Temperature Range: -20° - 180° F.

Our engineered Acetal plastic bearings have metal-like properties and offer and excellent balance of desirable mechanical properties that bridges the gap between metals and ordinary plastics. The chemical composition and highly crystalline structure of acetal homopolymers offer a unique combination of physical properties not available with metals or most other plastics. Because of these properties, this material creates a wear surface, which is excellent for bearings, bushings and cams.

Nylon 6/6: Operating Temperature Range: -20° - 250° F.

This material possesses an outstanding balance of properties, combining strength, moderate stiffness, high service temperature and a high level of toughness. Because of its low coefficient of friction, resistance to repeated impact, and resistance to abrasion, Nylon 6/6 makes an excellent material for bushings, bearings, and thrust washers.

Nylon 4/6: Operating Temperature: 340° F / 10,000 hrs.

Nylon 4/6 resin is used when a higher operating temperature is required to withstand prolonged periods of time. Nylon 4/6 exhibits a melting temperature of 560° F as well as higher crystalline structure compared to PA66. This feature gives a technical edge over other engineering plastics with regards to heat resistance, mechanical properties at elevated temperatures, wear, and friction behavior.

Mineral Reinforced Nylon: Operating Temperature Range: -20° - 280° F.

We use a toughened mineral reinforced nylon 6/6, which gives it superior impact strength as measured by both the Izod and Gardner (falling dart) impact tests. Adding our proprietary internal lubrication to this toughened resin provides the characteristics necessary for an extended wear bushing or spanner.

CERTIFIED ISO 9001:2008 COMPANY